RV College of Engineering®

Go, change the world

Department of Mechanical Engineering
RV College of Engineering®, Bengaluru – 560 059

ELEMENTS OF MECHANICAL ENGINEERING

UNIT- III
Automation & Robotics in Manufacturing

Dr. Prapul chandra AC, Asst. Prof., Department of Mechanical Engineering,
RV College of Engineering

UNIT- III (10 hours)

Automation in Manufacturing: Automation, Types of Automation, Historical Development, Definitions, Introduction to CNC Machines. Relative Merits and Demerits, CNC- Elements, merits, de-merits.

Robotics in Manufacturing

Robots- Basic Structure of Robots, Robot Anatomy, Complete Classification of Robots, Fundamentals about Robot Technology, Basic Robot Configurations and their Relative Merits and Demerits.

Automation and robotics:- Automation and robotics are two closely related technologies.

In an industrial context, we can dean automation as a technology that is concerned with the use of mechanical, electronic, and computer-based systems in the operation and control of production

Examples of this technology include transfer lines. Mechanized assembly machines, feedback control systems (applied to industrial processes), numerically controlled machine tools, and robots. Accordingly, robotics is a form of industrial automation.

Ex:- Robotics, CAD/CAM, FMS, CIMS

History:

The term automation is first coined by **Delmer S Harder** of **FORD Motor company in 1946** to describe the increased use of automatic device and control in mechanised production line.

Initially, this word was used to describe the automatic transfer of parts from one metal working machine to another. But automation is now used in both manufacturing and non-manufacturing context to describe variety of systems where human effort and intelligence are substantially substituted by mechanical, electrical or computerised action.

Definition

Automation is a technique that can be used to reduce costs and/or to improve quality. Automation can increase manufacturing speed, while reducing cost. Automation can lead to products having consistent quality, perhaps even consistently good quality.

OR

Automation is a technology concerned with application of mechanical, electronic and computer-based system to operate and control system. This technology includes;

- Automatic assembly machines
- Automation machine tools to process parts
- Industrial robots
- Automatic materials handling and storage system
- Automatic inspection system and quality control
- Feedback control and computer process control
- Computer system for planning, data collection and decision making to support manufacturing activities

Types of Automation:

Automation is categorized into three types. They are,

1)Fixed Automation

2) Programmable Automation

3) Flexible Automation.

Fixed Automation:-

It is the automation in which the sequence of processing or assembly operations to be carried out is fixed by the equipment configuration.

In fixed automation, the sequence of operations (which are simple) are integrated in a piece of equipment. Therefore, it is difficult to automate changes in the design of the product.

It is used where high volume of production is required Production rate of fixed automation is high. In this automation, no new products are processed for a given sequence of assembly operations.

Features:-

i) High volume of production rates,

ii) Relatively inflexible in product variety (no new products are produced).

iii) High initial investment for custom-engineered equipment High production rates

Examples:-

- Automobile industries.
- machining transfer lines and automated assembly machines.

Programmable Automation:-

It is the automation in which the equipment is designed to accommodate various product configurations in order to change the sequence of operations or assembly operations by means of control program. Different types of programs can be loaded into the equipment to produce products with new configurations (i.e., new products).

It is employed for batch production of low and medium volumes. For each new batch of different configured product, a new control program corresponding to the new product is loaded into the equipment. This automation is relatively economic for small batches of the product

Features:-

i) High investment in general purpose,

ii) Lower production rates than fixed automation,

iii) Flexibility & Changes in products configuration,

iv) More suitable for batch production.

Examples:-

- Industrial robot
- NC machines tools… etc

Flexible Automation:-

A computer integrated manufacturing system which is a extension of programmable automation is referred as flexibl automation. It is developed to minimize the time loss betwee the changeover of the batch production from one product t another while reloading.

The program to produce new products and changing th physical setup i.e., it 4 produces different products with n loss of time. This automation is more flexible i interconnecting work stations with material handling an storage system

Features:-

i) High investment for a custom engineering system.

ii) Medium Production rates

iii) Flexibility to deal with product design variation,

iv) Continuous production of variable mixtures of products.

Example:- Flexible manufacturing systems (FMS)

Advantages of Automation :-

1.High Production rates

2.Lead time decreases

3.Storing capacity decreases

4. Human errors are eliminated.

5.Labour cost is decreases.

Dis-Advantages of Automation :-

1.Initial cost of raw material is very high

2.Maintenance cost is high

3.Required high skilled Labour

4. Indirect cost for research development & programming increases.

Computer Numerical Control:

Computer Numerical Control or CNC is an advanced form of the NC system where the machi control unit is a dedicated microcomputer instead of a hard-wired controller, as in conventional N

CNC has evolved during the rapid improvements of the computer technology. The advent Microprocessor, from the 1970s have helped in quick advancements in the Computer Technolo and is in turn adapted in modern CNC Technology. Today's CNC controller has latest features li high speed of operation, large memories, bus architectures, improved servos, etc.

CNC Technology has powered the machine Tool industry today. It is used in majority of machi tools like machining centers, turning centers, grinders, lathes, drilling machines, etc.

Elements of a CNC System

A CNC System consists of the following elements:

- Input Device
- MCU or Machine Control Unit
- Machine Tool
- Driving System
- Feedback devices
- Display Unit

Elements of a CNC System

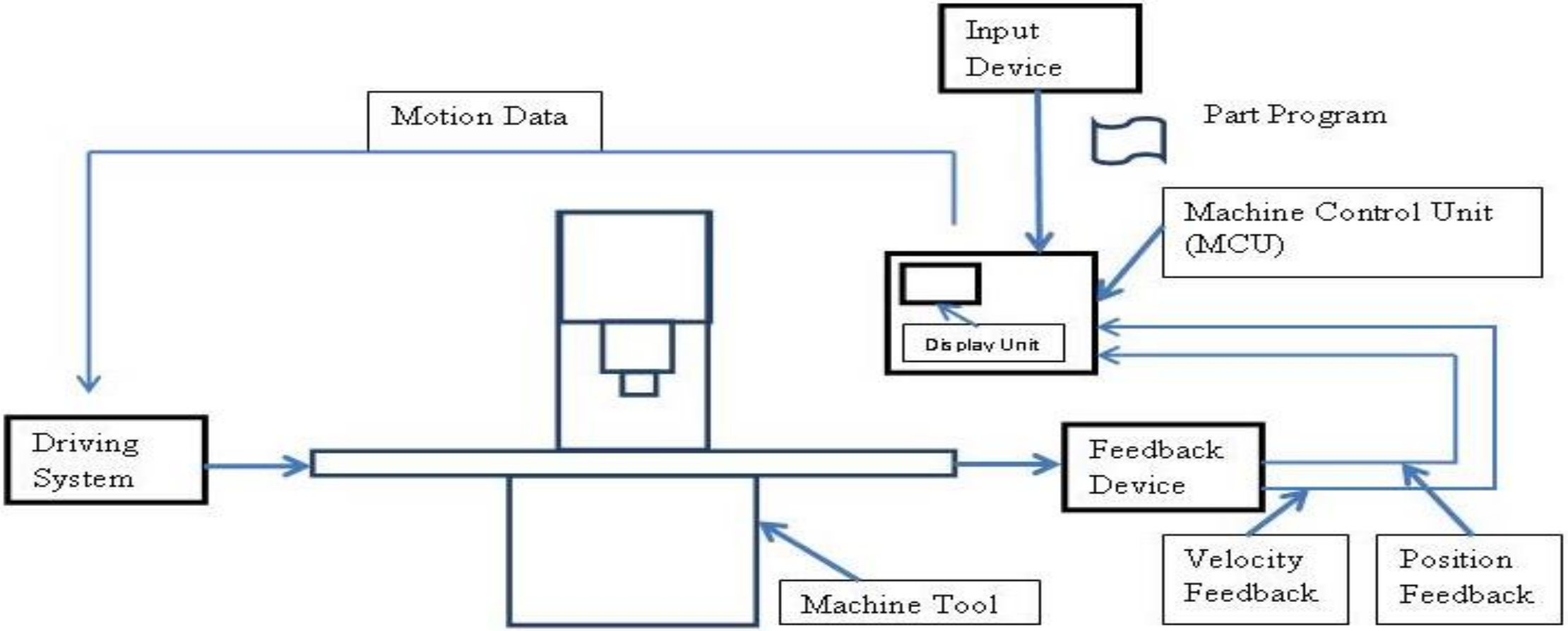

Input Device:

Through input device, part program is entered into CNC control c MCU (Machine Control Unit). Various input devices are as follows

- **USB (Universal serial Bus)** : USB flash drives transfer data t the control
- **Serial communication**: A serial communication port connect computer system and CNC machine tool through an interface calle RS-232. Through RS-232 cable , data is transferred from compute to CNC machine
- **Ethernet Communication**: Here, CNC machines are provided wit Ethernet Card support. An Ethernet cable transfers data from th computer to CNC machine
- **Conventional Programming**: A built-in intelligent software insic the controller enables the operator to enter step by step data

MCU or Machine Control Unit:

It is the heart of the CNC system. It consists of the following components

- **Central Processing Unit (CPU)** : It comprises of
  - **A control section** that retrieves data from memory and generates signals whic in turn activates all MCU components
  - **An ALU (Arithmetic Logic Unit)** that performs integer arithmetic operatio and logical operations
  - **Intermediate Access Memory**: This holds the data and programs temporari that is required at that instant by the control section.
- **CNC Memory**: The memory of CNC is divided into
  - **Main memory**. This consists of
    - **Read only Memory (ROM)** – stores Operating System (OS) software ar machine interface programs
    - **Random Access Memory (RAM)** – stores part programs
  - **Secondary Memory** – such as Hard Disks which is used to store large progran and can be used by main memory when required

- **Input / Output (I/O) Interface :**

I/O interface establishes communication between the machi operator, the components of CNC system and other connecte computers

- **Machine Tool Controls:**

A machine tool consists of various axes e.g. X,Y,Z,A,B,C and a spind which rotates at the designed RPM. Machine Tool Control hardwa components in the MCU control the position and velocity of each the axis and rotational speed of the spindle

- **Sequence controls for auxiliary functions:**

Certain auxiliary functions like **coolant control, emergency stop, to changing** function etc. are also carried out under part progra controls

Machine Tool:

The essential parts of the machine tool include the machine table, machine slide, t driving lead screw, ball screw, rigid and heavy machine structure, automatic to changing system, spindle and spindle drive system, chip removal system etc.

Driving System:

A driving system essentially is made up of amplifier circuits, drive motors and ba led screws. The commonly used types of electrical motors include DC Servo Moto AC Servo Motor, Stepper Motor and Linear Motor

Feedback Devices:

For the accurate operation of a CNC machine , the positional values and speed of t axes needs to be continuously updated. This is done by feedback devices. There a two types of feedback devices

- Positional feedback devices
- Velocity feedback devices

Display Unit:

Feedback Devices:

For the accurate operation of a CNC machine , the positional values and speed of t axes needs to be continuously updated. This is done by feedback devices. There a two types of feedback devices

- Positional feedback devices
- Velocity feedback devices

Display Unit:

This device displays the current status of operation such as the spindle RPM, t running part program, the feed rate, position of the machine slide etc. It shows t graphic simulation of the paths taken by the tool. Any malfunction of the CN system is also displayed as warnings. Other data Ex. machine parameters, log diagram of program controller, error message and diagnostic data are also displayed

Advantages of CNC Machines

- Avoids errors that were otherwise committed by humans operating conventional machines. eliminate human error
- Since CNC machines can be programmed, one person may well take care of a number of CNC machines. T reduces the employees and hence costs are reduced.``
- Using CNC machines results in a safer work environment since the operator is not exposed to the mach area during machining.

high accuracy and precition

- CNC Machines can be upgraded to newer technologies by replacing the existing CNC Control with an advanc one.
- Many CNC Machined can be linked together to a main computer. Programs can be downloaded to any connect CNC machines. This leads us to another type of NC concept called as the Direct Numerical Control (DNC).

Dis-Advantages of CNC Machines

- A thorough programming knowledge is required by the operators or programmer

  This again requires skilled programmer and hence the cost of labor can be high.

  initial investment is high

- Cost of a CNC Machine is high compared to the conventional Machines Tools.

  high maintenance

- The spares of CNC Machines are relatively costlier than conventional Machines.

- CNC Machines require air conditioned environment and/or a chiller unit. Th

  extra costs are involved.

ROBOT:

The word robot was first coined by Czech novelist KAREL CAPEK in 1920's. Th word robot means a servant or a worker. However, this was just a word coine but the actual technological development in the field of robot was first noted i the year 1957 by English inventor CYRIL WALTER KENWARD developed manipulator that could move in x-y-z axes system.

Robot definition: The Robot Institute of America in 1979 defined a Robot as follows:

A Robot is a reprogrammable, multifunctional manipulator designed to move material, parts, tools or specialized devices through variable programmed motions of performance of a variety of tasks.

A robot that is used to perform tasks in industries is called as an "industrial robot". An industrial robot can perform wide range of industrial tasks like loading, unloading, welding, painting, inspection, assembly, material transfer, etc.

Robot is a reprogrammable, multifunctional device designed to move material, parts or tools and to perform a variety of tasks.

Robotics definition: *Robotics can be defined "as a field of technology that deals with the conception, design, construction, operation and application of robots".*

But why a robot is required when a human can perform the tasks? That is because of the following qualities:

1. Robots can work in hazardous or dangerous environments such as a nuclear reactor, behind enemy lines, outside earth's atmosphere, etc. They can substitute humans in such environment.
2. Robots can consistently work as per the program with great repeatability and accuracy that is unmatched by the humans.
3. At the end of a task, robots can be reprogrammed to take up different task altogether.
4. Robot parts can be replaced when damaged.
5. In industries, Computer Integrated Manufacturing can be realized by connecting robots to computer system and carrying out the different tasks.

5.3 Basic terms related to Industrial Robots

In the study of Robotics, few basic terms are used quote often and their meanings are quite important. The terms used in relation to Industrial Robots are as below:

1. *Manipulator*: manipulator is an arm-like mechanism which is designed to manipulate or move materials, parts or tools without direct human contact.
2. *Joint*: A joint is the one that integrates two or more links to provide controlled relative movement between input link and the output link.
3. *Link*: The link is a rigid member that connects the joints. Link can be an input link and an output link. The movement of the input link causes various motions of the output link.
4. *Degrees of freedom (d.o.f)*: The degrees of freedom describes a robot's freedom of motion in the three-dimensional space.
5. *End effector*: End effector or end-of-arm tool is the device at the end of the robotic arm which is shaped like a hand or as a special tool depending upon the application.
6. *Base*: The support for the robot arm is called as the base.

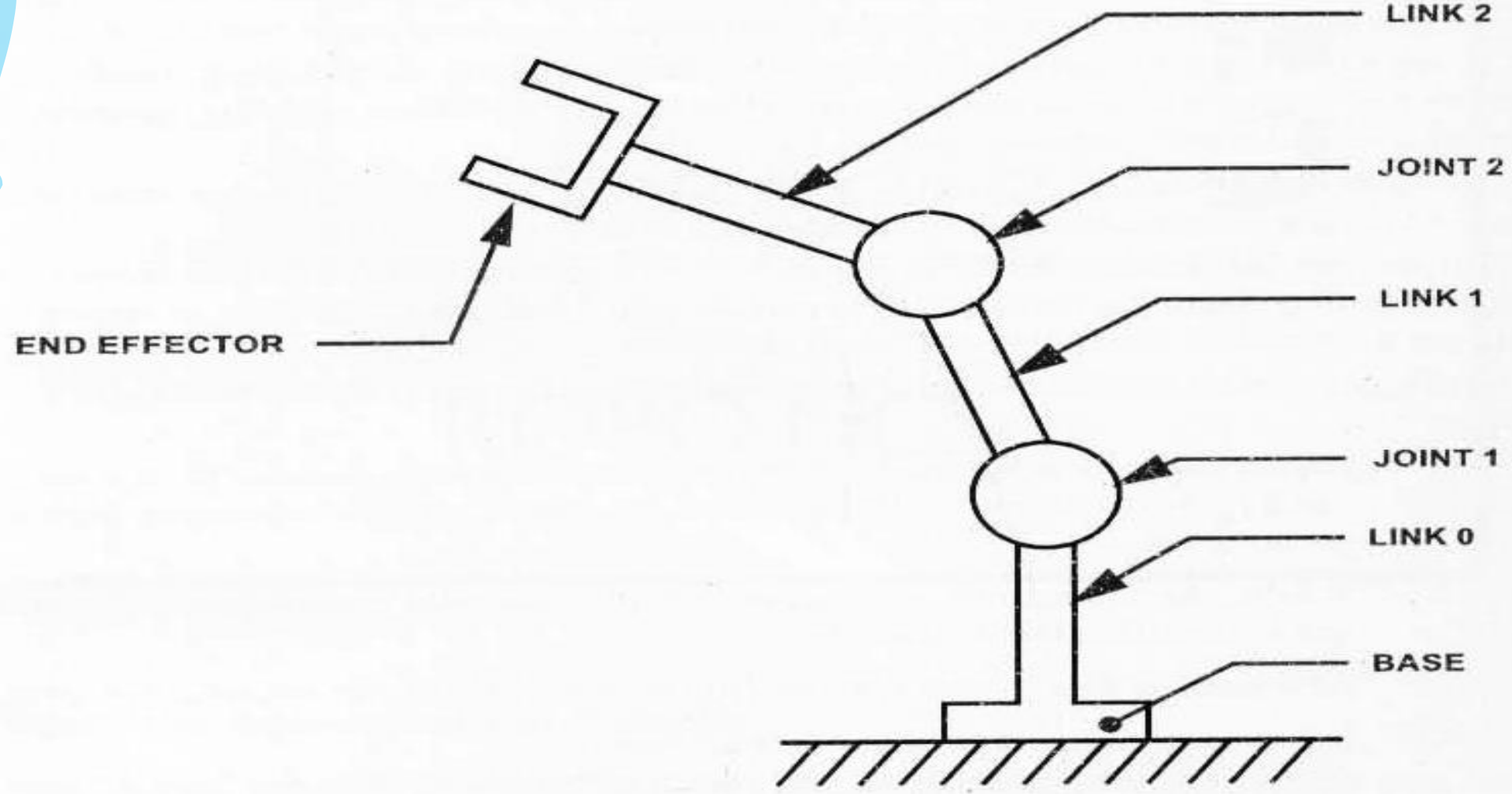
LINK 2
JOINT 2
LINK 1
END EFFECTOR
JOINT 1
LINK 0
BASE

5.4 Elements of a Robotic System

A Robotic system has the following basic elements:

1. **The Robot**: This consists of
   a. The *Manipulator* which includes the base and the arm assembly.
   b. *End-of-the-arm tooling* which is the end-effector.
   c. *Actuators* which convert stored energy into movement. Common actuators include electric motors and linear actuators.
   d. *Transmission elements* such as ball screws, pulleys, belts, gears, etc.

2. **Control System**: The control system generates the required signals to co-ordinate and execute the robot movements. The Control System comprises of:
   a. *Controls* such as Mechanical control, hydraulic control, pneumatic control, electrical or electronic control. The control techniques can be an open-loop (non-servo) control, feedback control, feed forward control and adaptive control.

b. *Sensors* that allows robots to collect information about a certain measurement of the environment or internal components. The sensors can be touch sensors or vision sensors.

c. Equipment Interfaces

3. **Computer System**: The Computer system is used to program the robots according to the tasks required to be performed. The necessary software must be installed in the computer to develop robot programs.

4. **Power Source**: Power source supplies electrical energy for the robot. The commonly used power source is the battery which can be a lead-acid battery or a silver-cadmium battery.

Classification of Robot based on Robot configuration:

- Polar configuration
- Cylindrical configuration
- Cartesian configuration
- Joint arm configuration

1. **Polar Configuration (Spherical Configuration):**

The Polar configuration robots also called as the spherical configuration robots consists of a sliding arm (L-joint) that is actuated relative to the body and a rotational base along with a pivot, which can rotate about a horizontal axis (R joint) and the vertical axis (T Joint). This is shown in the *Fig.5.4*.

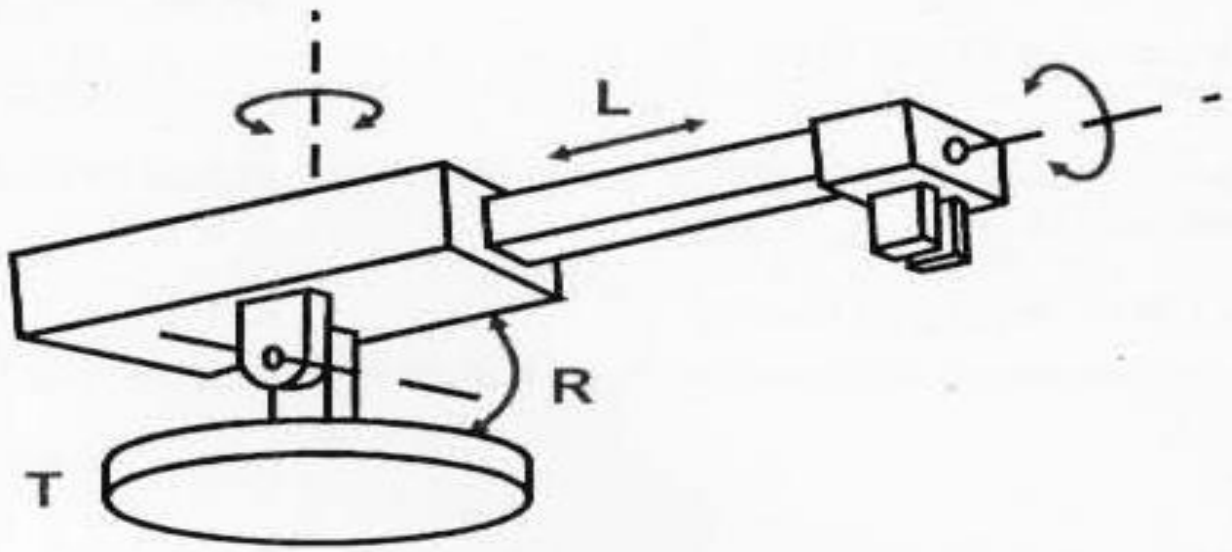

Polar Configuration Robot

The one linear and the two rotary joints creates a spherical work volume in which the robot operates. Example: The Unimate 2000 series robot. (*Courtesy: Unimation Inc.*)

Advantage:

Long reach capability is realized in the horizontal position

Disadvantage:

The vertical reach is low.

Applications:

Die casting, forging, injection moulding, dip coating, cleaning of parts, etc.

2. Cylindrical Configuration:

Robots of the cylindrical configuration consists of a slide in the horizontal position and a column in the vertical position. The arm assembly moves up or down relative to the column using as L-joint. The column is rotated about its axis using the T-joint. The radial movement of the arm is achieved using the O-joint as shown in the *Fig 5.5*.

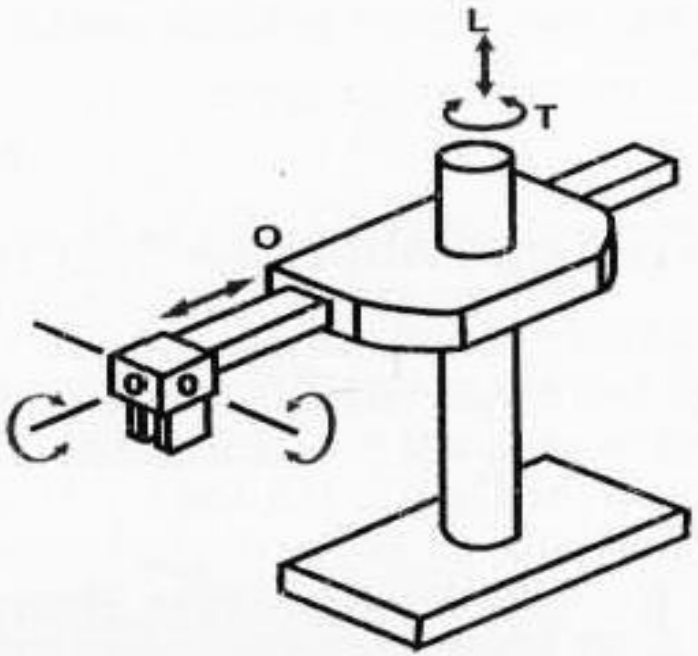

Cylindrical Configuration Robot

Example: Model 1A Robot of GMF Robotics Corp. *(Courtesy: GMF Robotics Corp.)*

Advantages:

1. Rigidity is increased and is quite robust.
2. Has the capacity to carry high payloads.

Disadvantages:

1. Work volume is less.
2. Occupies more floor space.

Applications: Foundry and forging applications, investment casting, conveyor pallet transfers, machine loading and unloading

Cartesian Co-ordinate Robot:

It is also called as a rectilinear robot or a XYZ Robot. It consists of three sliding joints along the X, Y and Z directions in three dimensional space. There are two orthogonal joints. Since movement can stop and start simultaneously along the X, Y and Z axes, the motion of the tool tip is smoother. A typical Cartesian co-ordinate Robot is shown in the *Fig. 5.6*.

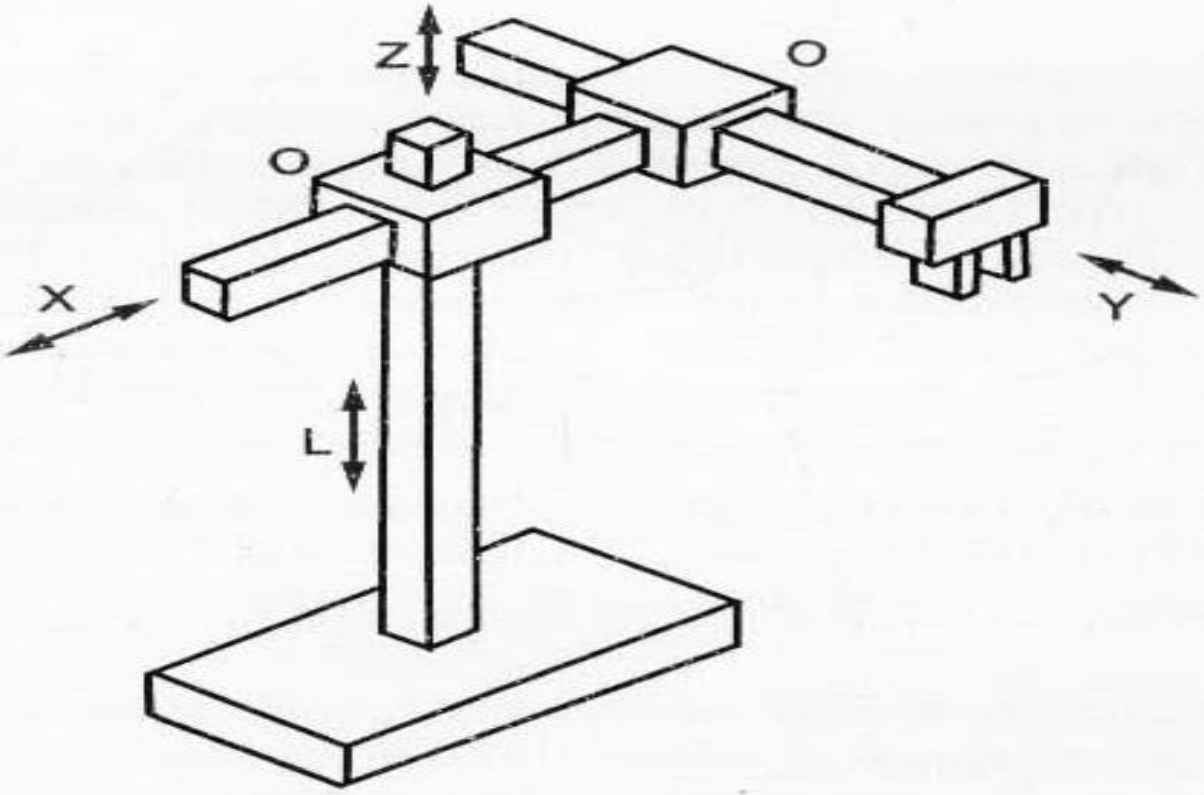

Cartesian Co-ordinate Robot

Advantages:

- Allows for simpler controls.
- Possess a high degree of mechanical rigidity, accuracy and repeatability.
- They can carry heavy loads and the weight lifting capacity do not vary within the work envelope.

Disadvantages:

- Limited in their movement to a small and rectangular work space.
- Reduced flexibility.

Applications:

To perform pick and place tasks, material handling, loading/unloading and machining operations

Jointed-arm Configuration Robot:

This type of Configuration resembles the human arm where the column swivels about a base (the column and the base forms a T-joint), the column top connects to the shoulder through a shoulder joint (which is the R-joint) and the shoulder connecting to the elbow through an elbow joint (which is also an R-joint). Thus, this configuration has the capability to be controlled at any adjustments in the work space. This is shown in *Fig. 5.7*.

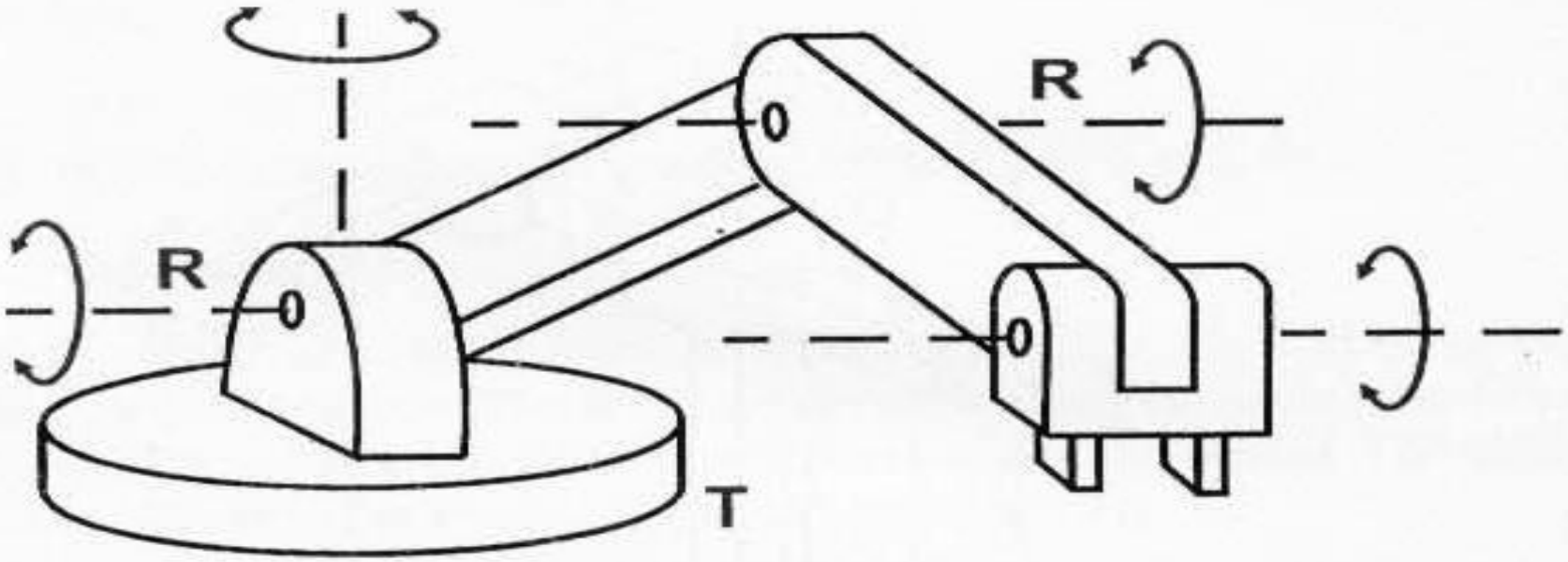

Jointed arm Configuration Robot

Advantages:

- The work volume available is large.
- Operation is quick.
- Flexibility is increased.

Disadvantages:

- Operating procedures are difficult.
- Quite expensive type of configuration.s
- Number of components involved are more.

Applications:

To perform arc welding, spot welding and spray painting operations

Applications of Robot

I. **Material / Part Handling applications**

Most of the applications of the Robot falls under this category. Here the Robots are used to

a. *Transfer materials* from one location to another location. Typical applications are as given below:

i. *Pick-and-place application*: The most common and simplest application here is the pick-and-place application where objects are picked from one location and placed to another location.

ii. *Palletizing application*: Another application that is slightly complex is the "Palletizing application" where the robot stacks products or carton boxes onto a pallet at various positions on the pallet to the required height. Example is the KUKA model KR 40 PA that can stack pallets upto 1.6 metre height and that has a payload carrying capacity of 40 kg (*Courtesy of Kuka Robotics Corporation*). The Robot picks from the same location, but is programmed to place at different locations on the pallet in the stacking row and column order. Here we use the teach-and-play method or program to compute the location of carton box by taking into account the center distance between the carton boxes and the box dimensions of length x width x height.

iii. *Depalletizing application*: Here the robot picks parts from an orderly stacked pallet to another location. Example: FANUC Robotics M-410iB/140H can handle 140 kg payload and can palletize and depalletize boxes and bags (*Courtesy: Fanuc Corporation*).

iv. *Stacking application*: Here, the robots are used to stack parts one upon another. After each placement, the vertical position is re-calculated and the new stacking height is determined. Example: FANUC M-2iA robot (*Courtesy: Fanuc Corporation*) was used by an organization to stack stamped parts on conveyors.

v. *Insertion operation*: Here, the robots are used to insert parts into the compartments or spaces provided in a carton.

Applications of Robot

b. *Machine loading/unloading*: In the machine loading/unloading application, a robot is used to move the work parts to or/and from the production machine.

The following three possibilities can be included for the loading/unloading application:

i. *Machine loading*: In the loading operation, a robot is used to load parts into the production machine, but the unloading of the finished parts after completion of operations of the production machine is done by means other than the use of a robot. Example: This is commonly applied in Press working process.

ii. *Machine unloading*: In the unloading operation, a robot is used to unload the finished parts that comes out of a production machine, but the loading of the parts on to the production machine is done by means other than the use of a robot. Example: Die casting and plastic modelling.

iii. *Machine loading and unloading*: In this operation, a robot is used to both load raw parts into the production machine and unload finished parts from the production machine. Example: Machining operation

Applications of Robot

Following are the industrial applications of robots used for machine loading/unloading:

1. *Die-casting*: Here the robot is used to safely unload the parts from a die-casting machine with the safety gates closed. Other connected applications are carrying out cooling tasks or parting agent applications.
2. *Forging*: Forging is one of the toughest environments considering the extreme heat, pollution and noise. The use of a robot immensely helps to face the environment of forging. Here the robot loads the red hot billet on to the die of the forging hammer, holds it during the blows and unloads to a safe place away from the hammer.
3. *Plastic injection moulding*: Here a robot unloads parts from the injection moulding machine, cuts the runner and drops runner to scrap area.
4. *Sheet metal press operation (Press working)*: Here a robot loads a blank into the press, then after the press stamping operation is performed the robot unloads the scrap and throws it into the scrap area. The stamped parts from the blank falls in the container placed at the back of the machine.
5. *Machining operations*: Here the robot loads the raw blanks on to the machine tool and unloads the finished parts.
6. *Heat treating*: Here the robot loads/unloads parts to/from a furnace.

Applications of Robot

II. Processing operations

Robots are used to carry out the processing operations such as spray painting, spot welding, etc by using a tool at its end-effector. The tools can be a spray painting gun for spray painting operation, a spot welding gun for spot welding operation, etc.

In processing operations, the robot manipulates a tool to perform a process on the work part.

Following are few processes that use industrial robots:

a. ***Spot Welding*:** Spot Welding is a metal joining process where two metal parts are squeezed together between two electrodes and subjected to a large amount of current to form a joint at particular points or spots. The end-effector of the robot here is the spot welding gun that applies the approximate pressure and current to the sheet parts to be welded. The spot welding robots have enough number of axes of motion to approach points in the work envelope at any angle. This was difficult to realize in a manned environment in the absence of robots. Spot welding is used largely in the automobile industry to weld automobile bodies such as car panels.

b. ***Arc Welding*:** Arc welding is a metal joining process where metals are welded by using the heat generated by an electric arc. The welding here is continuous unlike spot welding. When arc welding is manually carried out, the conditions are difficult for the operators since they require Personal Protective Equipment like welding shield with special glass to avoid UV rays, are under the danger of operating at high temperatures involving high amount of heat and moreover they must be accurate in following the welding path. These problems are now overcome with the use of arc welding robots.

Applications of Robot

The typical components of an arc welding cell includes:

i. *Arc welding robot*: Most popular is the jointed-arm type robot because it allows the welding torch to be manipulated similar to a manual operator. The torch and travel angles can be changed to make welds of good quality. Also welding can be done in areas that are difficult to reach. These robots typically consist of five or six free programmable axes.

ii. *Power Source*: This provides electric power required to do the arc welding operation.

iii. *Welding torch*: This is carried by the robot as its end-effector tool to direct the welding electrode into the arc.

iv. *Wire feeder*: These are used to add the filler material in robotic welding.

v. *Welding fixtures*: These hold the individual parts to be welded in proper alignment during welding.

Applications of Robot

c. ***Spray Coating*:** Spray coating is a process where parts are coated by a spray gun spraying the fluid on to the surface of the part. The fluid passes through the nozzle of the spray gun and is dispersed at high velocity to the surface to be coated. Common examples are powder coating and spray painting.

When human operators carry out the spray coating operations, it results in various health hazards such as the paint or powder fumes / particles entering the operator's body and causing illness, flash fires resulting in burning in the painting booth pit, ear damage due to continued noise of the nozzle, etc. Hence if affordable, robots can be the right substitution to work in such environments.

The robot end gripper is a spray coating gun which sprays the paint or coat on the work surface uniformly. The motion sequence must be smooth with continuous path control.

Spray coating robots are used in coating of the exterior and interior parts of a car, spray staining of wood furniture for carousel presentation, applying stain to textiles (like Jeans material), spraying porcelain coating on bathroom fixtures, etc.

Benefits of spray coating robot includes:

1. Protecting human operators from hazardous coating environments
2. Consistency across coated parts is high
3. Better productivity
4. Uniform coating on the coated surface
5. Reduced paint wastage

Applications of Robot

d. *Other Processing applications*: These include:

i. *Grinding*: Here the end effector of the robot is the rotating spindle and the grinding wheel is mounted in the spindle chuck. The robot moves its arms relative to the workpiece and grinds the material of the workpiece. Manual grinding has problems like exposure of the operator to fast moving tiny ground particles leading to damage to the eyes and face, requirement of intensive training and grindmark patches. On the other hand, use of robots can give us the perfect grinding finish with saving of time and absence of hazards. As a connected application, robots are used to polish surfaces using a polishing wheel.

ii. *Drilling and other machining processes*: The end-effector is the rotating spindle and the cutting tool is mounted in the spindle chuck.
Drilling a hole manually requires significant time and effort. Using robots in drilling helps to monitor drill speed, torque, countersinking, displacement and breaking of bits. The monitoring is done by sensors on the robots.
Aerospace industry uses robotic drilling due to the precision and productivity benefits. The only challenge of using robots in drilling and other machining operations is that the robot must handle the high cutting forces during machining.
Robots are now used in other machining processes like routing, milling, etc. The end-effector here are spindles on which appropriate tools are mounted according to these machining processes.

iii. *Plasma Cutting*: Plasma cutting is a process that uses high velocity ionized gas called plasma to heat and melt metals. The plasma later blows away the molten material mechanically to cut the workpiece which is usually one inch thick. Use of robots here results in high quality cuts at faster travel speeds. The plasma torch is attached to the robot as its end-effector.

iv. *Laser Cutting*: Laser cutting is a process that uses a high power laser through optics to cut materials. The laser tool as an end-effector is attached to the robot. The result of robotic laser cutting is precision cutting with high repeatability and accuracy.

v. *Waterjet Cutting*: Waterjet cutting is a process used to cut parts using a very high pressure stream of water. The nozzle ensures the high pressure of the water stream. When used with a robot, this nozzle becomes the end-effector and the arm moves in the programmed paths to achieve high quality cutting. Waterjet robots are used to cut various materials like metals, fabrics, board, plastic, etc. Waterjet robots is used in aerospace, automotive, textile, packaging and food industries.

vi. Other applications include wire brushing, deburring, fiberglass cutting, etc.

Advantages of Robot

Following are some important advantages of using Industrial Robots:

1. Robots can be substituted for humans to work in hazardous work environments. Example: During arc welding, in foundry environment, in powder coating environment, etc.
2. Robots can produce greater quantity in a short span of time with consistency and accuracy that cannot be matched by humans.
3. Robots can work at constant speeds without any break which is not possible by humans.
4. Robots are capable of lifting heavy loads without getting tired or injured.
5. Robots can work in tight spaces where human reach is not possible.
6. Robots can be re-programmed with changed tooling to take up a different task after the end of a batch or a production run. In such cases, robots are better than fixed automation.
7. Accidents at the workplace is avoided since robots perform the risky jobs which were otherwise done by humans.
8. Since Robots are controlled by computers, they can be integrated to other computer systems to realize Computer Integrated Manufacturing (CIM)
9. The usage of robots produces lesser or no defective parts and hence saves time of rework and money to the organization.

Dis-Advantages of Robot

Following are some disadvantages of using Industrial Robots:

1. Organizations have to make huge investments to introduce robots at their workplaces.
2. Since parts of a robot are made very precisely, their replacement is very difficult and to maintain, it costs huge amount of money.
3. To program and setup the robotic systems and robots, and to avoid unnecessary future problems and mishaps, it requires highly skilled technical engineers and programmers which again is a significant cost for the organization.
4. Unless the level of the artificial intelligence is highly sophisticated, robots may not be able to respond properly during times of emergency, during times of accidents or when an unexpected variance occurs.